PRODUCTION RELEASE

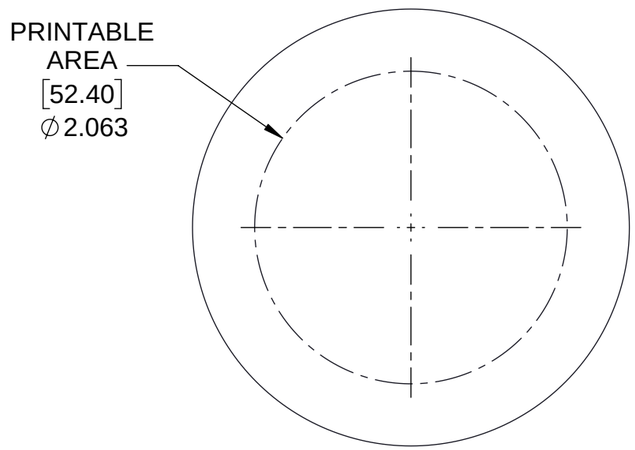

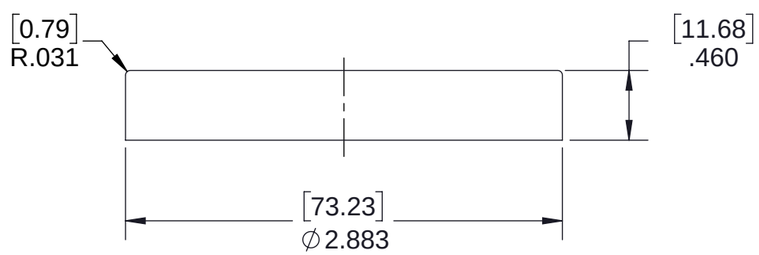

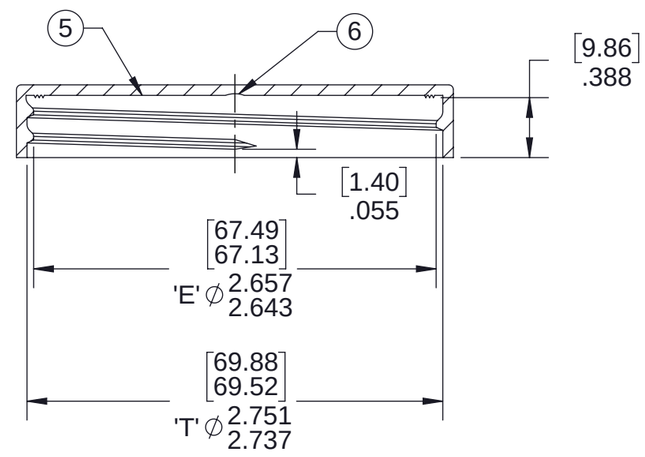

NOTES:

1. MAT'L: POLYPROPYLENE
2. 6 THREADS/INCH
3. ALL FILLETS & RADII TO BE: .010" [0.25] U.O.S.
4. DRAFT TO BE: 1/2˚ U.O.S.
5. CAVITY NUMBER
6. GATE LOCATION: INSIDE, CENTER
7. WEIGHT: APPROX. 9.2 GRAMS
8. TOLERANCE: DEC ±.015" [0.38] U.O.S.
9. PART#: 7225
10. ENGLISH DIMENSIONS IN INCHES
    METRIC DIMENSIONS IN [mm]

REV. H - 3/7/2019 - KSK
#RCT190054

(XXX) REFERENCE DIMENSIONS ARE NOT INSPECTED AND NO TOLERANCE APPLIED

XXX INSPECTION DIMENSIONS ARE VERIFIED WITH TOLERANCE

THIS DRAWING IS NOT A CONTROLLED DOCUMENT IF PRINTED OR COPIED FROM THE APPROVED LOCATION

Berry
101 OAKLEY STREET
EVANSVILLE,
INDIANA 47706
TEL. (812) 424-2904

CONFIDENTIAL
THIS UNPUBLISHED WORK IS THE PROPERTY OF BERRY GLOBAL INC. AND IS PROTECTED BY TRADE SECRET, COPYRIGHT AND OTHER INTELLECTUAL PROPERTY LAWS AND MAY ALSO BE SUBJECT TO A SPECIFIC OR GENERAL CONFIDENTIALITY AGREEMENT. IT IS NOT TO BE VIEWED BY UNAUTHORIZED PERSONS OR DUPLICATED IN ANY MEDIUM FOR PURPOSES OTHER THAN THOSE FOR WHICH IT IS SPECIFICALLY FURNISHED.

SIZE AND STYLE: CC70400SSJI			DRAWING TYPE: CUSTOMER			
DESCRIPTION: 70mm SMOOTH CLOSURE						
DRAWING NO: K7225-HS			PROJECT NUMBER:			
LAST MODIFIED BY AND DATE: jbragg - 7/17/2019 7:53:14 AM	CREATED BY: AHV	CREATION DATE: 2001-02-07	DRAWING REVISION: H	SHEET 1 of 1	SCALE: 1:1	SHEET SIZE B

V. 16